Problem 1: Determine the absolute velocity of the end-effector (P).

$^{A}\vec{V}_P$

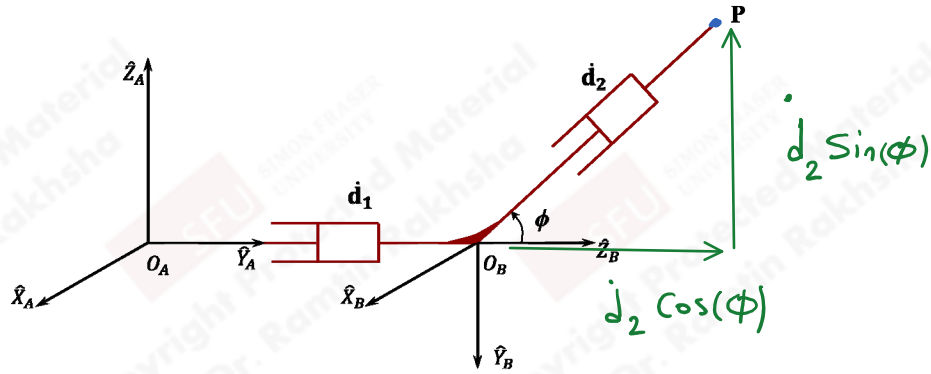

FROM SLIDE 8 :

$$^{A}\vec{V}_P = {}^{A}\vec{V}_{B_{ORG}} + {}^{A}_{B}[R]\,{}^{B}\vec{V}_P$$

$$^{A}\vec{V}_{B_{ORG}} = \begin{Bmatrix} 0 \\ \dot{d}_1 \\ 0 \end{Bmatrix}$$

$$^{A}_{B}[R] = \begin{bmatrix} \hat{X}_B\cdot\hat{X}_A & \hat{Y}_B\cdot\hat{X}_A & \hat{Z}_B\cdot\hat{X}_A \\ \hat{X}_B\cdot\hat{Y}_A & \hat{Y}_B\cdot\hat{Y}_A & \hat{Z}_B\cdot\hat{Y}_A \\ \hat{X}_B\cdot\hat{Z}_A & \hat{Y}_B\cdot\hat{Z}_A & \hat{Z}_B\cdot\hat{Z}_A \end{bmatrix} = \begin{bmatrix} 1 & 0 & 0 \\ 0 & 0 & 1 \\ 0 & -1 & 0 \end{bmatrix}$$

$$^{B}\vec{V}_P = \begin{Bmatrix} 0 \\ -\dot{d}_2 S\phi \\ \dot{d}_2 C\phi \end{Bmatrix}$$

$$^{A}\vec{V}_P = \begin{Bmatrix} 0 \\ \dot{d}_1 \\ 0 \end{Bmatrix} + \begin{bmatrix} 1 & 0 & 0 \\ 0 & 0 & 1 \\ 0 & -1 & 0 \end{bmatrix} \begin{Bmatrix} 0 \\ -\dot{d}_2 S\phi \\ \dot{d}_2 C\phi \end{Bmatrix}$$

$$\boxed{^{A}\vec{V}_P = \begin{Bmatrix} 0 \\ \dot{d}_1 + \dot{d}_2 C\phi \\ \dot{d}_2 S\phi \end{Bmatrix}}$$

Copyright Protected Material By Dr. Ramtin Rakhsha SFU SIMON FRASER UNIVERSITY

Problem 2: Determine the absolute velocity of the end-effector (P). Let the radius of the disc be r.

THIS PROBLEM CAN BE SOLVED IN TWO WAYS:

i) DERIVATIVES

ii) CROSS-PRODUCT

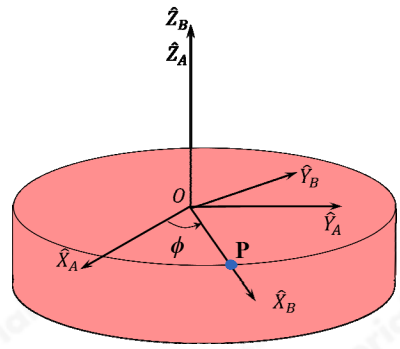

i) DERIVATIVES

$$ {}^{A}\vec{P}_P = {}^{A}_{B}[R]\,{}^{B}\vec{P}_P = \begin{bmatrix} c\phi & -s\phi & 0 \\ s\phi & c\phi & 0 \\ 0 & 0 & 1 \end{bmatrix} \begin{Bmatrix} r \\ 0 \\ 0 \end{Bmatrix} = \begin{Bmatrix} r c\phi \\ r s\phi \\ 0 \end{Bmatrix} \quad \text{EQ } 1 $$

$$ \boxed{ {}^{A}\vec{V}_P = \frac{d}{dt}\left({}^{A}\vec{P}_P\right) = \begin{Bmatrix} -r\dot{\phi}\, s\phi \\ r\dot{\phi}\, c\phi \\ 0 \end{Bmatrix} } $$

ii) CROSS-PRODUCTS

$$ {}^{A}\vec{P}_P = {}^{A}_{B}[R]\,{}^{B}\vec{P}_P $$

$$ {}^{A}\vec{V}_P = \frac{d}{dt}\left({}^{A}_{B}[R]\,{}^{B}\vec{P}_P \right) $$

FROM SLIDE #9 FROM CHAPTER 5,

$$ {}^{A}\vec{V}_P = {}^{A}\vec{\Omega}_B \times {}^{A}_{B}[R]\,{}^{B}\vec{P}_P $$

$$ = \begin{Bmatrix} 0 \\ 0 \\ \dot{\phi} \end{Bmatrix} \times \begin{bmatrix} c\phi & -s\phi & 0 \\ s\phi & c\phi & 0 \\ 0 & 0 & 1 \end{bmatrix} \begin{Bmatrix} r \\ 0 \\ 0 \end{Bmatrix} $$

$$ = \begin{Bmatrix} 0 \\ 0 \\ \dot{\phi} \end{Bmatrix} \times \begin{Bmatrix} r c\phi \\ r s\phi \\ 0 \end{Bmatrix} = \boxed{ \begin{Bmatrix} -r\dot{\phi}\, s\phi \\ r\dot{\phi}\, c\phi \\ 0 \end{Bmatrix} } $$

Copyright Protected Material By Dr. Ramtin Rakhsha

Problem 3: Determine the absolute velocity of the end-effector (P).

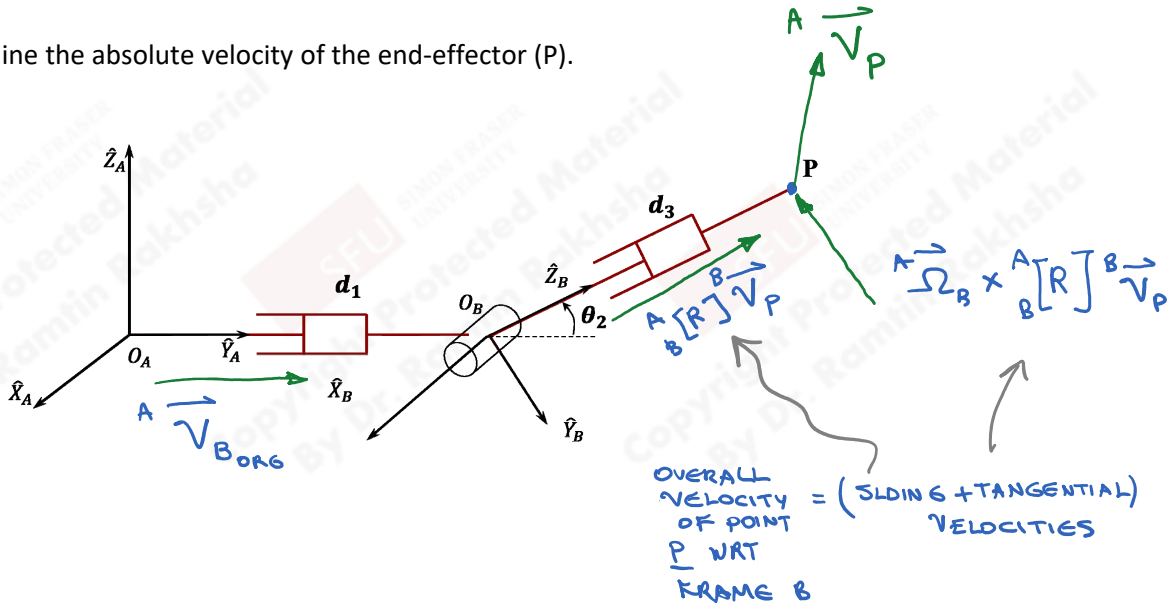

FROM SLIDE 10 OF CHAPTER 5:

$$\underbrace{{}^A\vec{V}_P}_{\text{ABSOLUTE VELOCITY OF POINT P}} = \underbrace{{}^A\vec{V}_{B_{ORG}}}_{\text{ABSOLUTE VELOCITY OF ORIGIN OF FRAME \{B\}}} + \underbrace{{}^A_B[R]\,{}^B\vec{V}_P}_{\text{SLIDING VELOCITY OF POINT P WRT FRAME \{A\}}} + \underbrace{{}^A\vec{\Omega}_B \times {}^A_B[R]\,{}^B\vec{P}_P}_{\text{TANGENTIAL VELOCITY OF POINT P WRT FRAME \{A\}}}$$

Copyright Protected Material By Dr. Ramtin Rakhsha

Problem 4: Determine the velocity of the end-effector's tip of the three revolute-jointed planar manipulator shown.

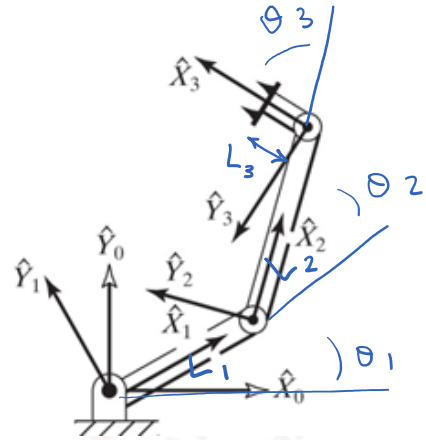

Velocity propagation - Revolute joints (slides 14 & 15)

ANGULAR $\quad {}^{i+1}\boldsymbol{\omega}_{i+1} = {}^{i+1}_{i}\boldsymbol{R}\,{}^{i}\boldsymbol{\omega}_i + \dot{\theta}_{i+1}\,{}^{i+1}\hat{Z}_{i+1}$

LINEAR $\quad {}^{i+1}\boldsymbol{v}_{i+1} = {}^{i+1}_{i}\boldsymbol{R}\,({}^{i}\boldsymbol{v}_i + {}^{i}\boldsymbol{\omega}_i \times {}^{i}\boldsymbol{P}_{i+1})$

$${}^{i+1}\hat{Z}_{i+1} = \begin{Bmatrix} 0 \\ 0 \\ 1 \end{Bmatrix}$$

WE CAN FIND

$${}^{0}_{1}[T] = \begin{bmatrix} c_1 & -s_1 & 0 & 0 \\ s_1 & c_1 & 0 & 0 \\ 0 & 0 & 1 & 0 \\ 0 & 0 & 0 & 1 \end{bmatrix}$$

$${}^{1}_{2}[T] = \begin{bmatrix} c_2 & -s_2 & 0 & L_1 \\ s_2 & c_2 & 0 & 0 \\ 0 & 0 & 1 & 0 \\ 0 & 0 & 0 & 1 \end{bmatrix}; \quad {}^{2}_{3}[T] = \begin{bmatrix} c_3 & -s_3 & 0 & L_2 \\ s_3 & c_3 & 0 & 0 \\ 0 & 0 & 1 & 0 \\ 0 & 0 & 0 & 1 \end{bmatrix}; \quad {}^{3}_{e.e}[T] = \begin{bmatrix} 1 & 0 & 0 & L_3 \\ 0 & 1 & 0 & 0 \\ 0 & 0 & 1 & 0 \\ 0 & 0 & 0 & 1 \end{bmatrix}$$

USING THE EQ'S FOR REV JOINTS FROM SLIDES 14 & 15

$i=0$

$${}^{1}\vec{\omega}_1 = {}^{1}_{0}[R]\,\cancel{{}^{0}\vec{\omega}_0}^{\,0} + \dot{\theta}_1\,{}^{1}\hat{Z}_1$$

$${}^{1}\vec{\omega}_1 = {}^{1}_{0}[R]\begin{Bmatrix} 0 \\ 0 \\ 0 \end{Bmatrix} + \dot{\theta}_1\begin{Bmatrix} 0 \\ 0 \\ 1 \end{Bmatrix} = \begin{Bmatrix} 0 \\ 0 \\ \dot{\theta}_1 \end{Bmatrix}$$

$${}^{1}\vec{v}_1 = {}^{1}_{0}[R]\left(\cancel{{}^{0}\vec{v}_0}^{\,0} + \cancel{{}^{0}\vec{\omega}_0}^{\,0} \times {}^{0}\vec{P}_1\right) = \begin{Bmatrix} 0 \\ 0 \\ 0 \end{Bmatrix}$$

$i=1$

$${}^{2}\vec{\omega}_2 = {}^{2}_{1}[R]\,{}^{1}\vec{\omega}_1 + \dot{\theta}_2\,{}^{2}\hat{Z}_2$$

$$= \begin{bmatrix} c_2 & s_2 & 0 \\ -s_2 & c_2 & 0 \\ 0 & 0 & 1 \end{bmatrix}\begin{Bmatrix} 0 \\ 0 \\ \dot{\theta}_1 \end{Bmatrix} + \dot{\theta}_2\begin{Bmatrix} 0 \\ 0 \\ 1 \end{Bmatrix} = \begin{Bmatrix} 0 \\ 0 \\ \dot{\theta}_1 + \dot{\theta}_2 \end{Bmatrix}$$

$${}^{2}\vec{v}_2 = {}^{2}_{1}[R]\left({}^{1}\vec{v}_1 + {}^{1}\vec{\omega}_1 \times {}^{1}\vec{P}_2\right)$$

$$= \begin{bmatrix} c_2 & s_2 & 0 \\ -s_2 & c_2 & 0 \\ 0 & 0 & 1 \end{bmatrix}\left(\begin{Bmatrix} 0 \\ 0 \\ 0 \end{Bmatrix} + \begin{Bmatrix} 0 \\ 0 \\ \dot{\theta}_1 \end{Bmatrix} \times \begin{Bmatrix} L_1 \\ 0 \\ 0 \end{Bmatrix}\right) = \begin{Bmatrix} L_1 s_2 \dot{\theta}_1 \\ L_1 c_2 \dot{\theta}_1 \\ 0 \end{Bmatrix}$$

Copyright Protected Material By Dr. Ramtin Rakhsha

$$i=2 \begin{cases} {}^3\vec{\omega}_3 = {}^3_2[R]\,{}^2\vec{\omega}_2 + \dot{\theta}_3\,{}^3\hat{Z}_3 \\ \quad = \begin{bmatrix} C_3 & S_3 & 0 \\ -S_3 & C_3 & 0 \\ 0 & 0 & 1 \end{bmatrix} \begin{Bmatrix} 0 \\ 0 \\ \dot{\theta}_1+\dot{\theta}_2 \end{Bmatrix} + \dot{\theta}_3 \begin{Bmatrix} 0 \\ 0 \\ 1 \end{Bmatrix} = \begin{Bmatrix} 0 \\ 0 \\ \dot{\theta}_1+\dot{\theta}_2+\dot{\theta}_3 \end{Bmatrix} \\ {}^3\vec{V}_3 = {}^3_2[R]\left({}^2\vec{V}_2 + {}^2\vec{\omega}_2 \times {}^2\vec{P}_3\right) \\ \quad = \begin{bmatrix} C_3 & S_3 & 0 \\ -S_3 & C_3 & 0 \\ 0 & 0 & 1 \end{bmatrix} \left(\begin{Bmatrix} L_1 S_2 \dot{\theta}_1 \\ L_1 C_2 \dot{\theta}_1 \\ 0 \end{Bmatrix} + \begin{Bmatrix} 0 \\ 0 \\ \dot{\theta}_1+\dot{\theta}_2 \end{Bmatrix} \times \begin{Bmatrix} L_2 \\ 0 \\ 0 \end{Bmatrix} \right) \\ \quad = \begin{Bmatrix} L_1 S_{23} \dot{\theta}_1 + L_2 S_3 (\dot{\theta}_1+\dot{\theta}_2) \\ L_1 C_{23} \dot{\theta}_1 + L_2 C_3 (\dot{\theta}_1+\dot{\theta}_2) \\ 0 \end{Bmatrix} \end{cases}$$

$$i=3 \begin{cases} {}^{e.e}\vec{\omega}_{e.e} = {}^3\vec{\omega}_3 \\ {}^{e.e}\vec{V}_{ee} = {}^{e.e}_3[R]\left({}^3\vec{V}_3 + {}^3\vec{\omega}_3 \times {}^3\vec{P}_{ee}\right) \\ \quad = \begin{bmatrix} 1 & 0 & 0 \\ 0 & 1 & 0 \\ 0 & 0 & 1 \end{bmatrix} \left(\begin{Bmatrix} L_1 S_{23} \dot{\theta}_1 + L_2 S_3 (\dot{\theta}_1+\dot{\theta}_2) \\ L_1 C_{23} \dot{\theta}_1 + L_2 C_3 (\dot{\theta}_1+\dot{\theta}_2) \\ 0 \end{Bmatrix} + \begin{Bmatrix} 0 \\ 0 \\ \dot{\theta}_1+\dot{\theta}_2+\dot{\theta}_3 \end{Bmatrix} \times \begin{Bmatrix} L_3 \\ 0 \\ 0 \end{Bmatrix} \right) \\ \quad = \begin{Bmatrix} L_1 S_{23} \dot{\theta}_1 + L_2 S_3 (\dot{\theta}_1+\dot{\theta}_2) \\ L_1 C_{23} \dot{\theta}_1 + L_2 C_3 (\dot{\theta}_1+\dot{\theta}_2) + L_3 (\dot{\theta}_1+\dot{\theta}_2+\dot{\theta}_3) \\ 0 \end{Bmatrix} \end{cases}$$

WE CAN FIND ${}^0\vec{V}_{e.e}$ BY MULTIPLYING ${}^0_{e.e}[R]\,{}^{e.e}\vec{V}_{ee}$

$$ {}^0\vec{V}_{ee} = \begin{bmatrix} C_{123} & S_{123} & 0 \\ -S_{123} & C_{123} & 0 \\ 0 & 0 & 1 \end{bmatrix} \begin{Bmatrix} L_1 S_{23} \dot{\theta}_1 + L_2 S_3 (\dot{\theta}_1+\dot{\theta}_2) \\ L_1 C_{23} \dot{\theta}_1 + L_2 C_3 (\dot{\theta}_1+\dot{\theta}_2) + L_3 (\dot{\theta}_1+\dot{\theta}_2+\dot{\theta}_3) \\ 0 \end{Bmatrix} $$

$$ = \begin{Bmatrix} -L_1 S_1 \dot{\theta}_1 - L_2 S_{12} (\dot{\theta}_1+\dot{\theta}_2) - L_3 S_{123} (\dot{\theta}_1+\dot{\theta}_2+\dot{\theta}_3) \\ L_1 C_1 \dot{\theta}_1 + L_2 C_{12} (\dot{\theta}_1+\dot{\theta}_2) + L_3 C_{123} (\dot{\theta}_1+\dot{\theta}_2+\dot{\theta}_3) \\ \dot{\theta}_1+\dot{\theta}_2+\dot{\theta}_3 \end{Bmatrix} $$

Copyright Protected Material By Dr. Ramtin Rakhsha

Problem 5: For the arm with 3-DOF shown, there is a twist of 90 degrees in magnitude between axes 1 and axes 2. Let L_3 be the length of the end-effector.

a) Drive link parameters and the kinematics for ${}^{B}_{W}T$.

b) Solve for velocity propagation.

$i-1$	α_{i-1}	a_{i-1}	d_i	θ_i	i
0	$\alpha_0 = 0$	$a_0 = 0$	$d_1 = 0$	θ_1	1
1	$\alpha_1 = 90^\circ$	$a_1 = L_1$	$d_2 = 0$	θ_2	2
2	$\alpha_2 = 0$	$a_2 = L_2$	$d_3 = 0$	θ_3	3

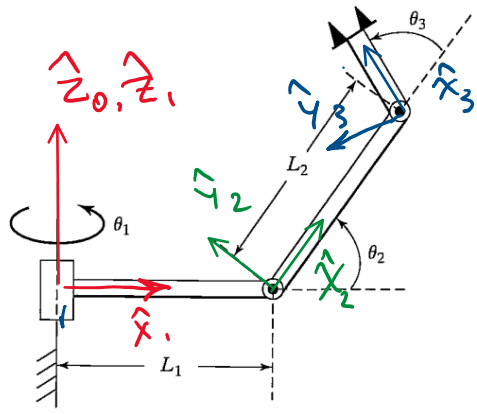

$$ {}^{0}_{1}T = \begin{bmatrix} c_1 & -s_1 & 0 & 0 \\ s_1 & c_1 & 0 & 0 \\ 0 & 0 & 1 & 0 \\ 0 & 0 & 0 & 1 \end{bmatrix} \qquad {}^{1}_{2}T = \begin{bmatrix} c_2 & -s_2 & 0 & L_1 \\ 0 & 0 & -1 & 0 \\ s_2 & c_2 & 0 & 0 \\ 0 & 0 & 0 & 1 \end{bmatrix} $$

$$ {}^{2}_{3}T = \begin{bmatrix} c_3 & -s_3 & 0 & L_2 \\ s_3 & c_3 & 0 & 0 \\ 0 & 0 & 1 & 0 \\ 0 & 0 & 0 & 1 \end{bmatrix} \qquad {}^{0}_{3}T = \begin{bmatrix} c_1c_{23} & -c_1s_{23} & s_1 & L_1c_1 + L_2c_1c_2 \\ s_1c_{23} & -s_1s_{23} & -c_1 & L_1s_1 + L_2s_1c_2 \\ s_{23} & c_{23} & 0 & L_2s_2 \\ 0 & 0 & 0 & 1 \end{bmatrix} $$

$$ {}^{i+1}\vec{\omega}_{i+1} = {}^{i+1}_{i}[R]\, {}^{i}\vec{\omega}_i + \dot{\theta}_{i+1}\, {}^{i+1}\hat{Z}_{i+1} $$

$$ {}^{i+1}\vec{v}_{i+1} = {}^{i+1}_{i}[R]\left({}^{i}\vec{v}_i + {}^{i}\vec{\omega}_i \times {}^{i}\vec{P}_{i+1}\right) $$

$$ {}^{i+1}\hat{Z}_{i+1} = \begin{Bmatrix} 0 \\ 0 \\ 1 \end{Bmatrix} $$

$i=0$

$$ {}^{1}\vec{\omega}_1 = {}^{1}_{0}[R]\, \underbrace{{}^{0}\vec{\omega}_0}_{0} + \dot{\theta}_1\, {}^{1}\hat{Z}_1 = \begin{Bmatrix} 0 \\ 0 \\ \dot{\theta}_1 \end{Bmatrix} $$

$$ {}^{1}\vec{v}_1 = {}^{1}_{0}[R]\left(\underbrace{{}^{0}\vec{v}_0}_{0} + \underbrace{{}^{0}\vec{\omega}_0}_{0} \times {}^{0}\vec{P}_1\right) = \begin{Bmatrix} 0 \\ 0 \\ 0 \end{Bmatrix} $$

$i=1$

$$ {}^{2}\vec{\omega}_2 = {}^{2}_{1}[R]\, {}^{1}\vec{\omega}_1 + \dot{\theta}_2\, {}^{2}\hat{Z}_2 $$

$$ = \begin{bmatrix} c_2 & -s_2 & 0 \\ 0 & 0 & -1 \\ s_2 & c_2 & 0 \end{bmatrix}^{-1} \begin{Bmatrix} 0 \\ 0 \\ \dot{\theta}_1 \end{Bmatrix} + \dot{\theta}_2 \begin{Bmatrix} 0 \\ 0 \\ 1 \end{Bmatrix} = \begin{bmatrix} c_2 & 0 & s_2 \\ -s_2 & 0 & c_2 \\ 0 & -1 & 0 \end{bmatrix} \begin{Bmatrix} 0 \\ 0 \\ \dot{\theta}_1 \end{Bmatrix} + \begin{Bmatrix} 0 \\ 0 \\ \dot{\theta}_2 \end{Bmatrix} = \begin{Bmatrix} s_2\dot{\theta}_1 \\ c_2\dot{\theta}_1 \\ \dot{\theta}_2 \end{Bmatrix} $$

$$ {}^{2}\vec{v}_2 = {}^{2}_{1}[R]\left({}^{1}\vec{v}_1 + {}^{1}\vec{\omega}_1 \times {}^{1}\vec{P}_2\right) $$

$$ = \begin{bmatrix} c_2 & 0 & s_2 \\ -s_2 & 0 & c_2 \\ 0 & -1 & 0 \end{bmatrix} \left(\begin{Bmatrix} 0 \\ 0 \\ 0 \end{Bmatrix} + \underbrace{\begin{Bmatrix} 0 \\ 0 \\ \dot{\theta}_1 \end{Bmatrix} \times \begin{Bmatrix} L_1 \\ 0 \\ 0 \end{Bmatrix}}_{\begin{Bmatrix} 0 \\ L_1\dot{\theta}_1 \\ 0 \end{Bmatrix}} \right) = \begin{Bmatrix} 0 \\ 0 \\ -L_1\dot{\theta}_1 \end{Bmatrix} $$

$i=2$

$$ {}^{3}\vec{\omega}_3 = {}^{3}_{2}[R]\, {}^{2}\vec{\omega}_2 + \dot{\theta}_3\, {}^{3}\hat{Z}_3 $$

$$ = \begin{bmatrix} c_3 & s_3 & 0 \\ -s_3 & c_3 & 0 \\ 0 & 0 & 1 \end{bmatrix} \begin{Bmatrix} s_2\dot{\theta}_1 \\ c_2\dot{\theta}_1 \\ \dot{\theta}_2 \end{Bmatrix} + \begin{Bmatrix} 0 \\ 0 \\ \dot{\theta}_3 \end{Bmatrix} = \begin{Bmatrix} s_{23}\dot{\theta}_1 \\ c_{23}\dot{\theta}_1 \\ \dot{\theta}_2 + \dot{\theta}_3 \end{Bmatrix} $$

$$ {}^{3}\vec{v}_3 = {}^{3}_{2}[R]\left({}^{2}\vec{v}_2 + {}^{2}\vec{\omega}_2 \times {}^{2}\vec{P}_3\right) $$

$$ = \begin{bmatrix} c_3 & s_3 & 0 \\ -s_3 & c_3 & 0 \\ 0 & 0 & 1 \end{bmatrix} \left(\begin{Bmatrix} 0 \\ 0 \\ -L_1\dot{\theta}_1 \end{Bmatrix} + \underbrace{\begin{Bmatrix} s_2\dot{\theta}_1 \\ c_2\dot{\theta}_1 \\ \dot{\theta}_2 \end{Bmatrix} \times \begin{Bmatrix} L_2 \\ 0 \\ 0 \end{Bmatrix}}_{\begin{Bmatrix} 0 \\ L_2\dot{\theta}_2 \\ -L_2c_2\dot{\theta}_1 \end{Bmatrix}} \right) = \begin{Bmatrix} s_3L_2\dot{\theta}_2 \\ c_3L_2\dot{\theta}_2 \\ -L_1\dot{\theta}_1 - L_2c_2\dot{\theta}_1 \end{Bmatrix} $$

IF ASKED TO FIND ${}^{0}\vec{v}_3$: $\quad {}^{0}\vec{v}_3 = {}^{0}_{3}[R]\, {}^{3}\vec{v}_3$

IT CAN ALSO BE FOUND THAT:

$$ {}^{4}\vec{v}_4 = \begin{Bmatrix} s_3L_3\dot{\theta}_2 \\ c_3L_2\dot{\theta}_2 - L_3(\dot{\theta}_2 + \dot{\theta}_3) \\ -L_1\dot{\theta}_1 - L_2c_2\dot{\theta}_1 - L_3c_{23}\dot{\theta}_1 \end{Bmatrix} $$

Copyright Protected Material By Dr. Ramin Rakhsha SFU SIMON FRASER UNIVERSITY